E103-W12C-TB Development Board Manual

Chengdu Ebyte Electronic Technology Co.,Ltd.

Catalog

Disclaimer and Copyright Notice 1
1. Introduction 2
1.1 Features 2
1.2 Parameters 2
2. Function introduction 3
2.1 Components introduction 3
2.2 Pin Definition 4
2.3 Function Introduction 6
3. Program burning guide 7
4. Version info 7
5. About us 7

Copyright ©2012–2023, Chengdu Ebyte Electronic Technology Co., Ltd.

Disclaimer and Copyright Notice

The information in this document, including the URL addresses for reference, is subject to change without notice. this document is provided "as is" without warranty of any kind, including any warranty of merchantability, fitness for a particular purpose, or non-infringement, and any warranty that any proposal, specification, or sample is referred to elsewhere. This document is provided without warranty of any kind, including any warranty of merchantability, fitness for a particular purpose or non-infringement, and any warranty mentioned elsewhere in any proposal, specification or sample. No license, express or implied, to use any intellectual property is granted herein by estoppel or otherwise.。

The test data in this document are obtained from Ebyte's laboratory tests and the actual results may vary slightly.

All trade names, trademarks and registered trademarks mentioned in this document are the property of their respective owners and are hereby declared.

The final explanation right belongs to Chengdu Ebyte Electronic Technology Co., LTD.

Notes：
Due to product version upgrade or other reasons, the contents of this manual may change. Chengdu Ebyte Electronic Technology Co., LTD, Ltd. reserves the right to modify the contents of this manual without any notice or prompt. This manual is only intended as a guide for use. Chengdu Ebyte Electronic Technology Co., LTD. makes every effort to provide accurate information in this manual. However, Chengdu Ebyte Electronic Technology Co., LTD. does not warrant that the content of this manual is completely error-free, and all statements, information and recommendations in this manual do not constitute any express or implied warranty.

1. Introduction

1.1 Features

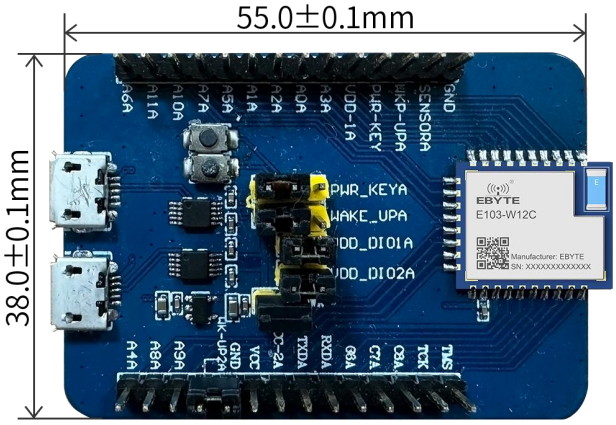

E103-W12C-TB

The E103-W12C-TB are two entry-level development boards that use the E103-W12C module, which is named for its ultra-low power consumption. The development board has full Wi-Fi function, and most of the pins of the module on the board have been drawn to the two sides of the pin, developers can easily connect a variety of peripheral devices through the jumper according to actual needs, and can also plug the development board into the breadboard.

1.2 Parameters

No.	Parameters	value	Notes
1	Support module	E103-W12C E103-W12X	WiFi serial port module
2	Module size	55* 38mm	With USB interface
3	Production technology	Lead-free process, machine sticker	Wireless products must be mounted to ensure batch consistency and reliability

4	Power supply interface	USB	-
5	Communication interface	TTL	-
6	Working temperature	-40 ~ +85℃	Industrial grade
7	Working humidity	10% ~ 90%	Relative humidity, no condensation
8	Storage temperature	-40 ~ +125℃	Industrial grade

2. Function introduction

2.1 Components introduction

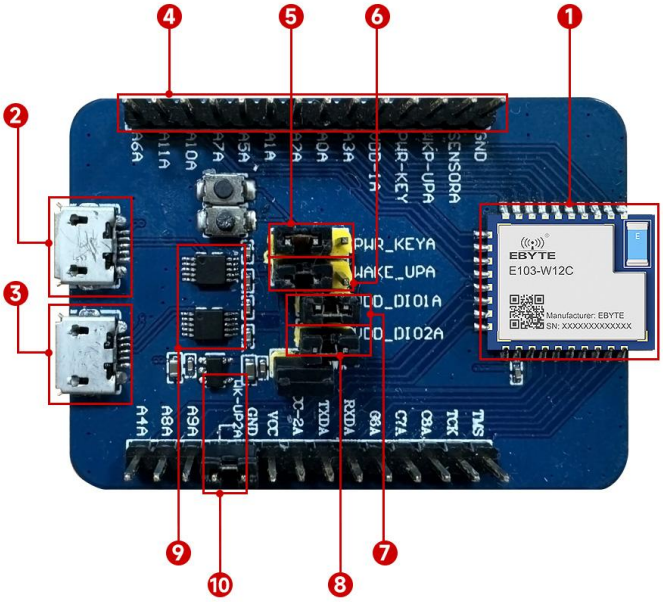

Figure 1 Main component diagram

No.	Main parts	Introduction
1	E103-W12C	The E103-W12C is a universal Wi-Fi module with a ceramic

		antenna. This module integrates 4 MB embedded flash chip. Since flash is packaged directly in the chip, the E103-W12C module has a smaller package size.
2	Micro usb	Micro usb Connects to the AT command serial port.
3	Micro usb	Micro usbConnect the debugging serial port.
4	Array pin	All available GPIO pins (except flash's SPI bus) have been drawn to the development board's row pins. Please see the stitches for more information.
5	PWR_KEY	PWR_KEY Power supply enable pin, high level enable, low level off in sleep1 mode, normal connector is 3.3v on the left.
6	WAKE_UP	WAKE_UP sleep2/sleep3 external wakeup foot, falling edge effective, normal leftThe GPIOA1-GPIOA11 supplies 1.8v-3.3v power. The GPIO output voltage is the same. Insert the jumper cap to the left.connector 3.3v.
7	VDD_DIO1	The GPIOA1-GPIOA11 supplies 1.8v-3.3v power. The GPIO output voltage is the same. Insert the jumper cap to the left.
8	VDD_DIO2	The GPIOC6-GPIOC8 supplies 1.8v-3.3v power. The GPIO output voltage is the same. Insert the jumper cap to the left.
9	USB to UART bridge	Single-chip USB to UART bridge that provides transfer rates of up to 1 Mbps.
10	WAKE_UP2	Grounding is not in use.

Note: For specific functional instructions, please refer to E103-W12C User Manual and E103-W12 AT Instruction Manual.

2.2 Pin Definition

The following is a front view of the E103-W12C-TB as an example:

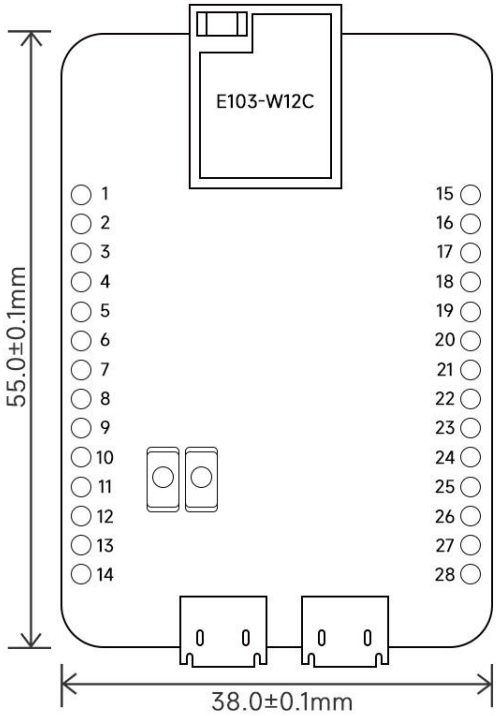

Figure 2 Current test interface diagram

Pin NO.	Pin	Type	Pin definition
1	GND	-	Ground wire, connected to the power reference ground
2	NC	-	-
3	WAKE_UP	-	sleep2/sleep3 External wake-up foot
4	PWR_KEY	-	Power pin, high level enable, low level off in sleep1 mode
5	VDD_DIO1	I/O	The GPIOA1-GPIOA11 supplies 1.8v-3.3v, and the GPIO output voltage is the same
6	GPIOA3	I/O	Universal I/O port, ADC channel3 can be reused
7	GPIOA0	I/O	Universal I/O port, multiplexed ADC channel0
8	GPIOA2	I/O	Universal I/O port, ADC channel2 can be reused
9	GPIOA1	I/O	Universal I/O port, ADC channel1 can be reused
10	GPIOA5	I/O	AT command serial port UART_RX
11	GPIOA7	I/O	Universal IO port
12	GPIOA10	I/O	Universal I/O port, PWM output can be reused
13	GPIOA11	I/O	Universal IO port, receives data notification pin in sleep3 mode
14	GPIOA6	I/O	Universal IO port
15	JTAG_TMS	-	JTAG emulation pins, users do not need to care
16	JTAG_TCLK	-	JTAG emulation pins, users do not need to care

17	GPIOC8	I/O	Universal IO port
18	GPIOC7	I/O	Universal IO port
19	GPIOC6	I/O	Universal IO port
20	UART0_RXD	I/O	Debugging serial port RX, users do not care
21	UART0_TXD	I/O	Debug serial port TX, users do not care
22	VDD_DIO2	I/O	GPIOC6-GPIOC8 supplies 1.8v-3.3v, and the output voltage of GPIO is the same
23	VCC	I/O	Module power supply, 3.3v
24	GND	I/O	Ground wire, connected to the power reference ground
25	RTC_WAKE_UP2	I/O	Pull-down ground
26	GPIOA9	I/O	Universal IO port
27	GPIOA8	I/O	Universal IO port
28	GPIOA4	I/O	AT command serial port UART1_TX

Note: 1.I: input; O: Output.

2. The power supply mode is Micro-USB (default), 5V and GND bar power, 3V3 and GND bar power。

2.3 Function Introduction

The following figure shows the main components and connection modes of the E103-W12C-TB：

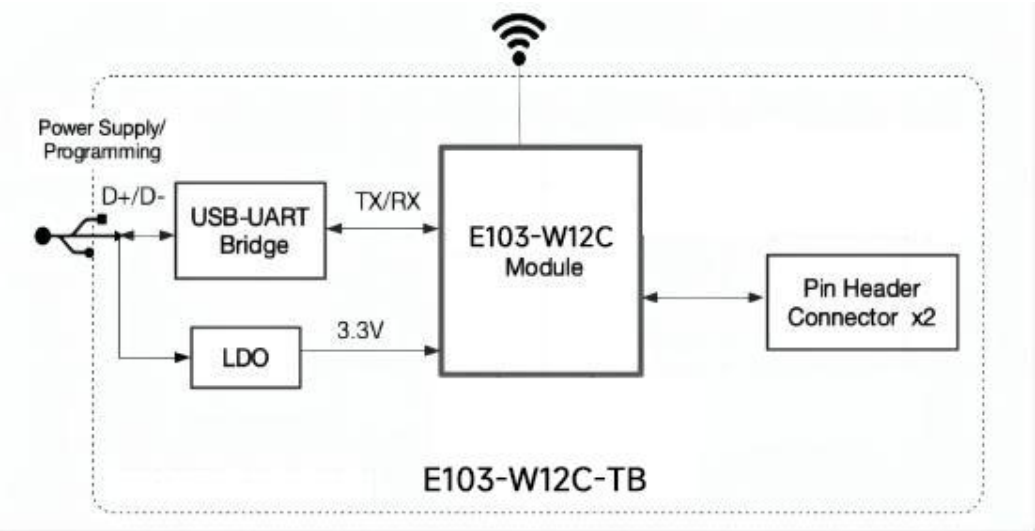

3. Program burning guide

- Before powering on, ensure that the E103-W12C-TB is intact.
- Tools: E103-W12C-TB, USB 2.0 cable (standard type A to Micro-B, computer (Windows, Linux, or macOS). Please make sure to use the appropriate USB cable, some data cables can only be used for charging, not for data transfer and programming.
- Access the USB data cable, burn or debug the program on the upper computer software;

4. Version info

Version	Revise date	Revise note	maintainer
1.0	2022-10-27	Initial version	Hao

5. About us

Sales hotline: 4000-330-990 Company
Technical support: support@cdebyte.com
Official website: https://www.cdebyte.com
Address: Building B5, 199 West Avenue, Gaoxin West District, Chengdu City, Sichuan Province

成都亿佰特电子科技有限公司
Chengdu Ebyte Electronic Technology Co.,Ltd.

Copyright ©2012–2023, Chengdu Ebyte Electronic Technology Co., Ltd.